Strength of Materials
Tutorial Series 3 : Axial Loading

Exercise 1

The compound rod depicted in Figure 1 consists of three segments subjected to different axial forces. Multiple design conditions must be respected.

The first condition imposes working stresses of 130 MPa for steel, 80 MPa for aluminium, and 100 MPa for bronze. The second condition requires that the total elongation must not exceed 1 mm.

Knowing that $A_s = 450\ mm^2$, $L_s = 400\ mm$, $E_s = 210$ GPa, $A_{Al} = 300\ mm^2$, $L_{Al} = 500\ mm$, $E_{Al} = 70$ GPa, $A_{br} = 200\ mm^2$, $L_{br} = 200\ mm$, and $E_{br} = 90$ GPa :

Find the maximum load P that satisfies these conditions.

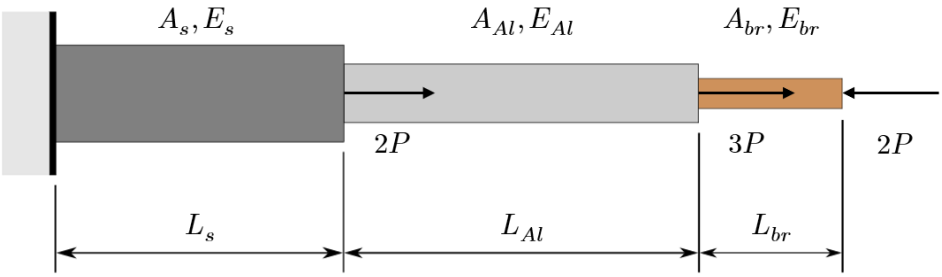

Figure 1

Exercise 2

A tubular steel bar (outer diameter $d = 400\ mm$, thickness e) belonging to the steel structure of the Centre Georges Pompidou (Paris) is subjected to a tensile force of 400 kN.

The material properties of the steel employed are : $E = 200$ GPa and $\sigma_y = 240$ MPa.

1. Determine the minimum admissible thickness e_{min} considering a factor of safety $s = 3$.
2. If the tubular member has a length of 3.5 m, determine its elongation.

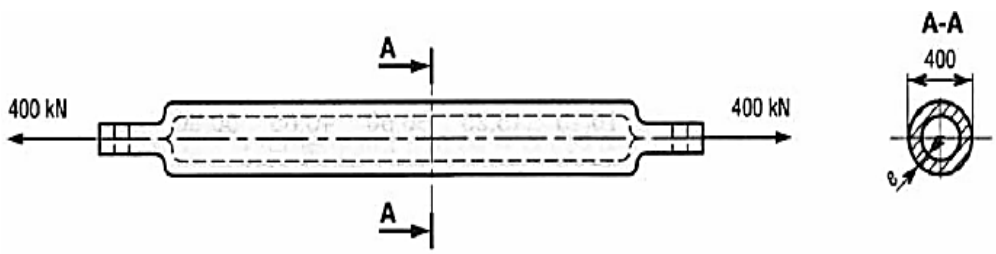

Figure 2

Exercise 3

Figure 3 depicts a flat bar of rectangular cross–section subjected to a tensile force P. Assuming that the angle of taper is small :

1. Determine the formula of the bar's elongation.
2. Calculate the elongation using the following data : $L = 2\ m$, $a = 150\ mm$, $b = 228\ mm$, $t = 14\ mm$, $E = 96$ GPa, and $P = 190\ kN$.

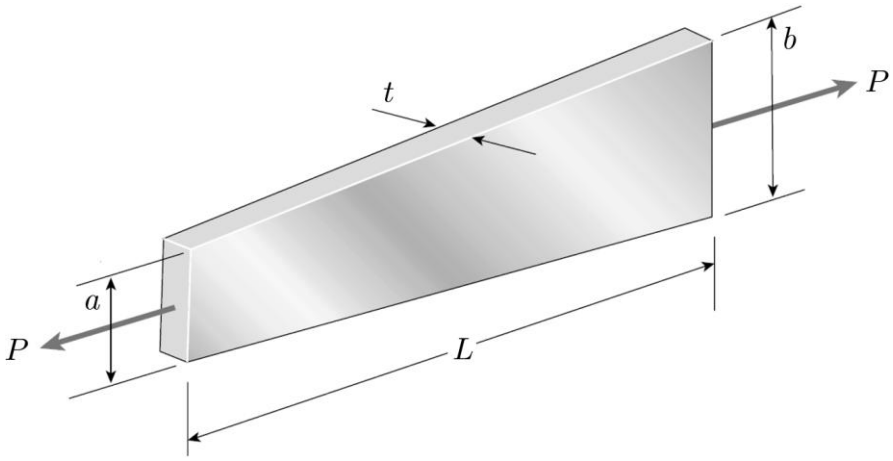

Figure 3

Exercise 4

A solid steel cylinder of length L, cross–sectional area A_s, and modulus of elasticity E_s is fitted into a copper tube of the same length L, cross–sectional area A_c, and modulus of elasticity E_c. The assembly is subjected to a compressive load P (see Figure 4).

1. Determine the compressive forces in each element.
2. Deduce the corresponding compressive stresses.
3. Determine the shortening of the assembly.

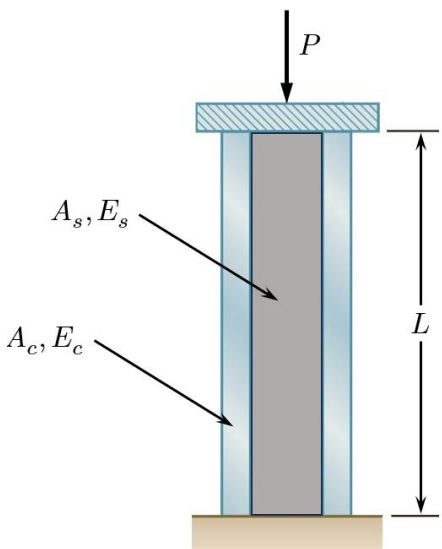

Figure 4